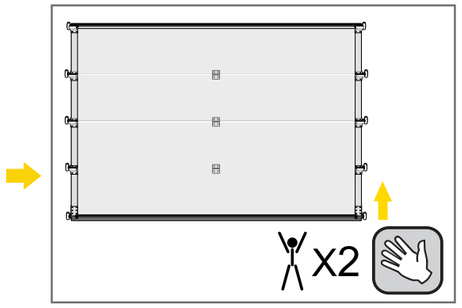
X2

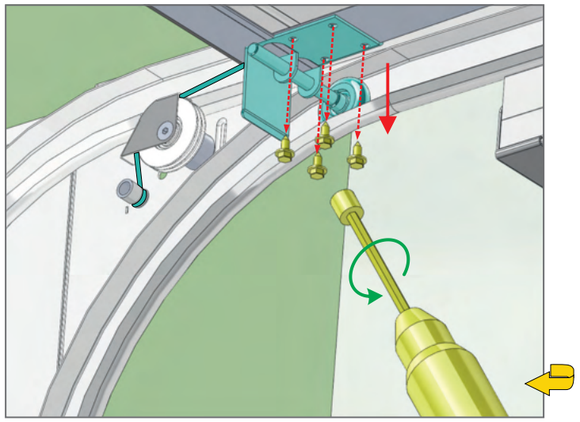

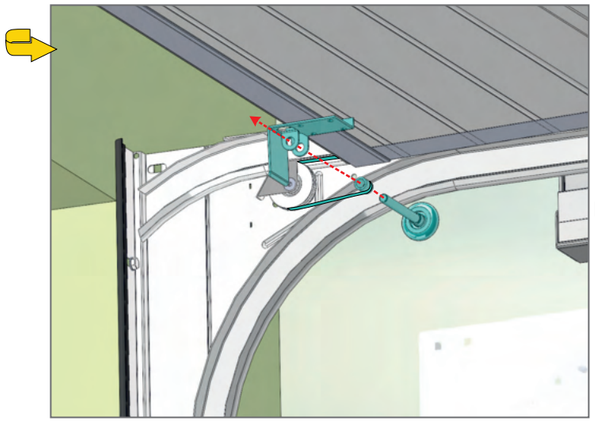

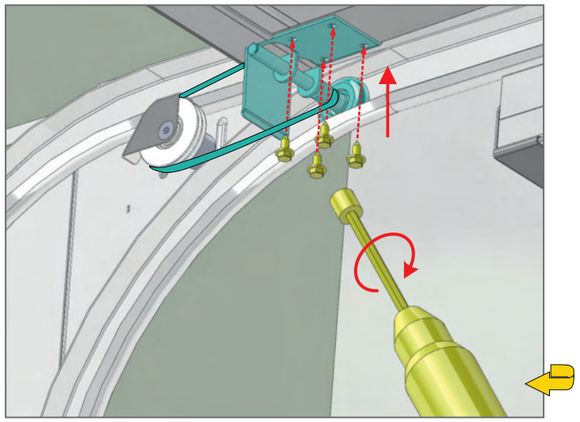

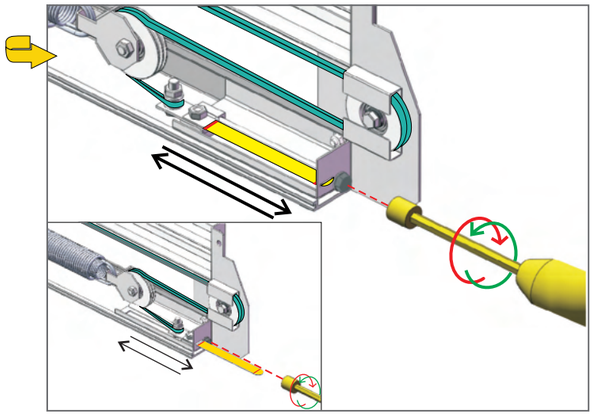

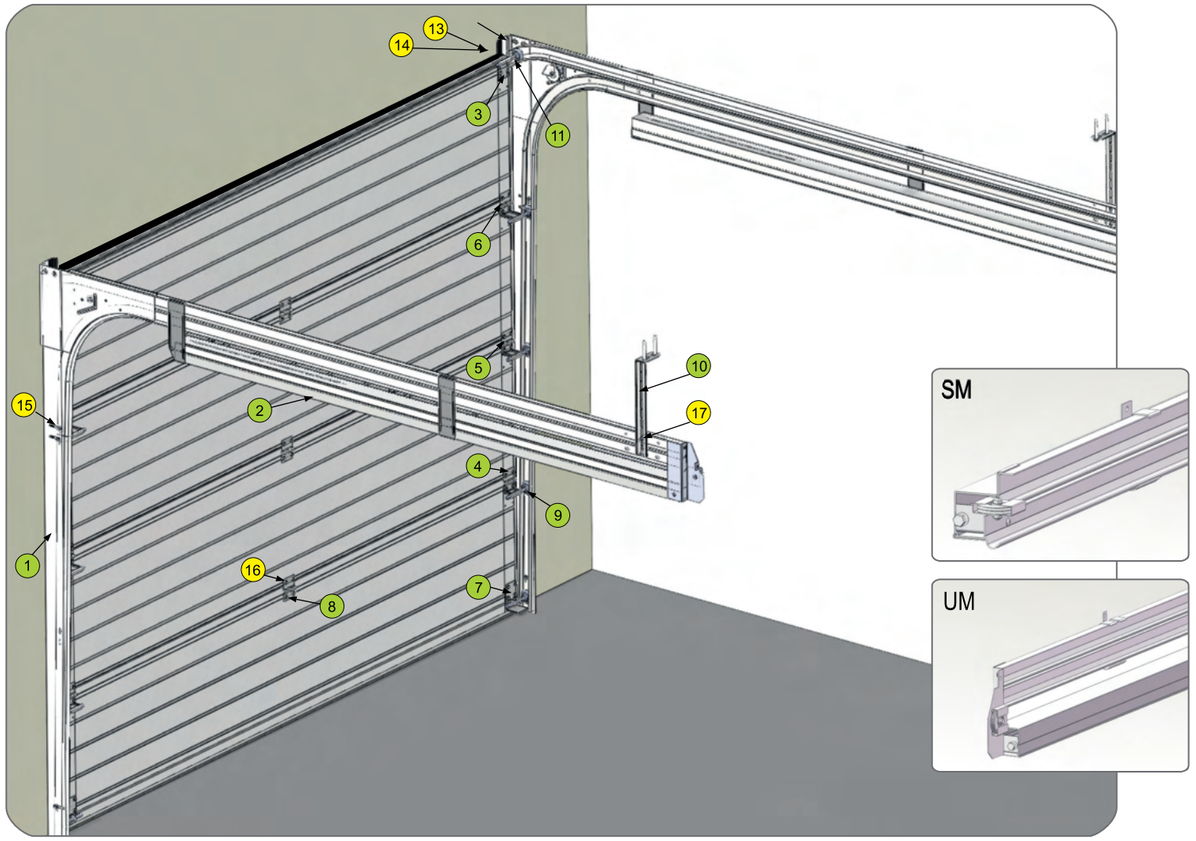
13
14
3
11
6
5
10
17
15
2
4
9
1
16
8
7
SM
UM

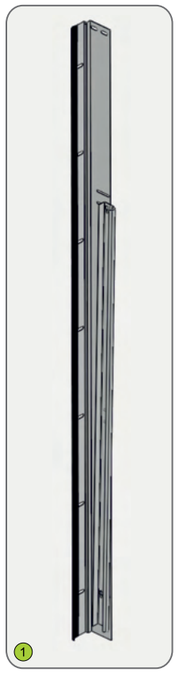
1

2
3
#3
6
9
12
13
#1
4
7
10
14
15
#2
5
8
11
16
17

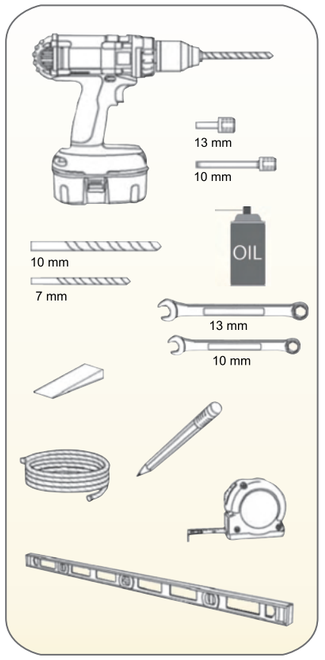
13 mm
10 mm
10 mm
7 mm
OIL
13 mm
10 mm

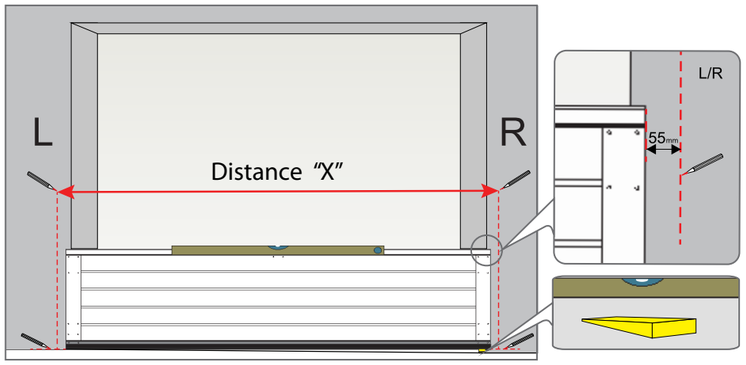
L
R
Distance "X"
L/R
55mm

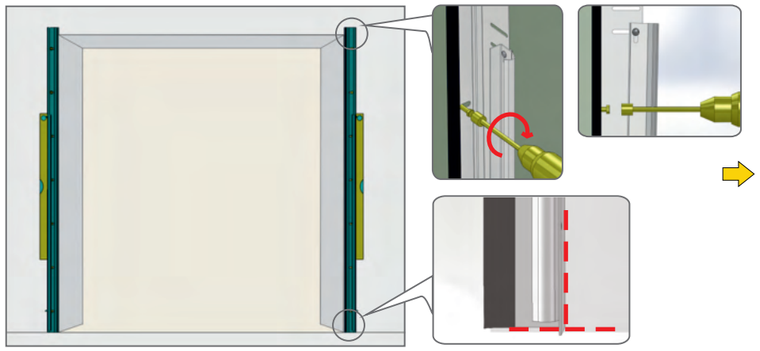

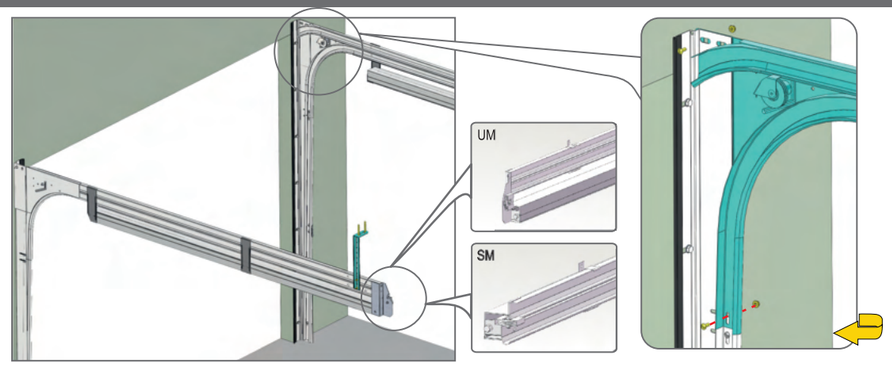
UM
SM

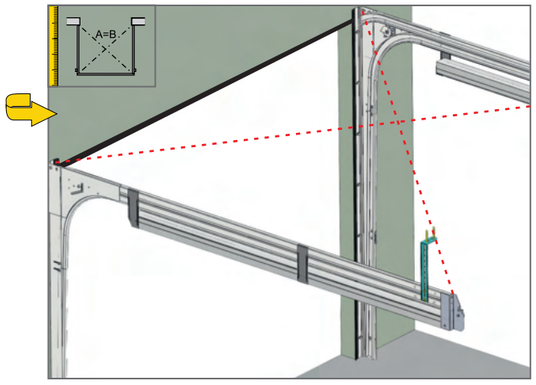
A=B

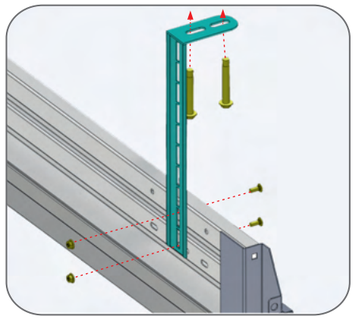

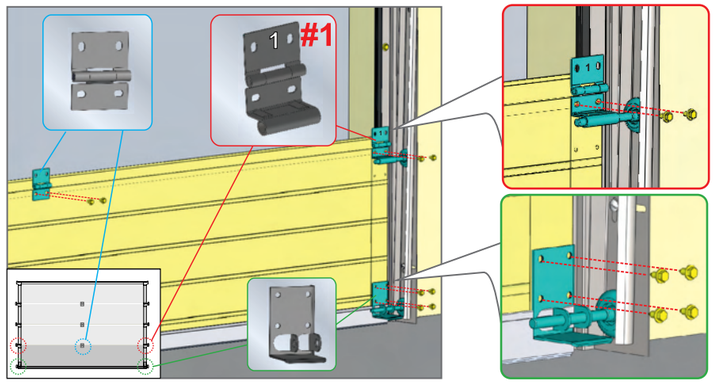
1
#1

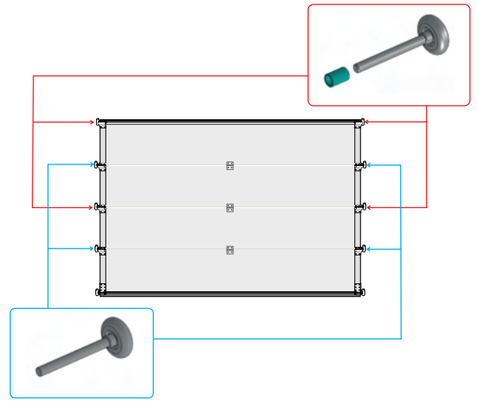

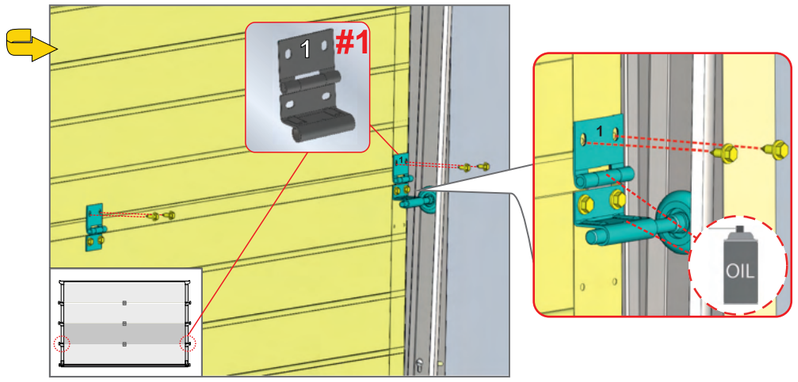
1
#1
OIL

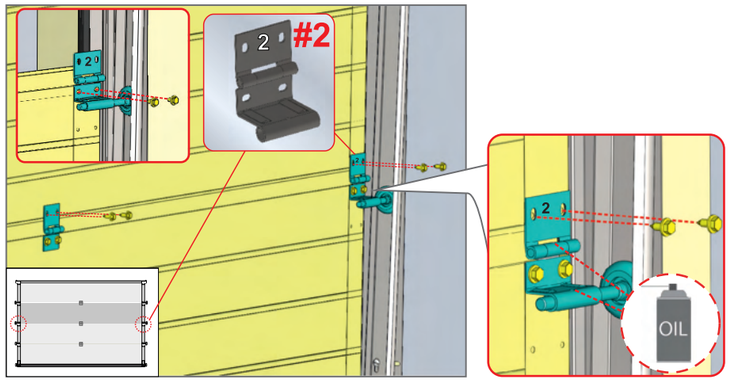
2
#2
OIL

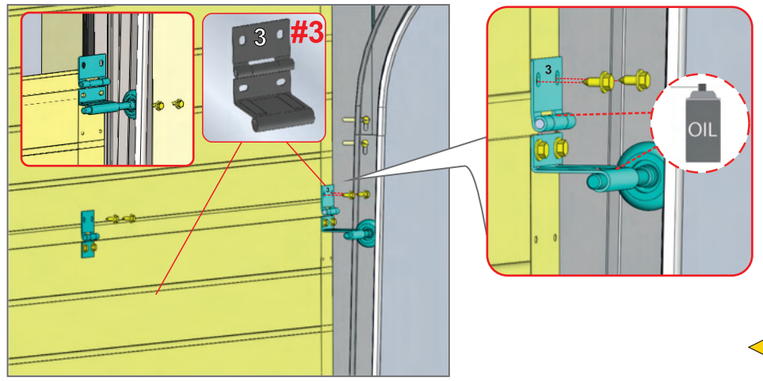
3
#3
OIL

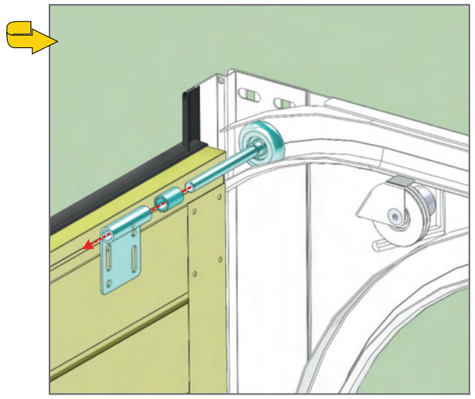

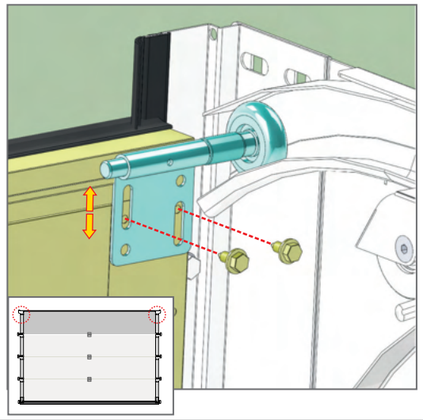

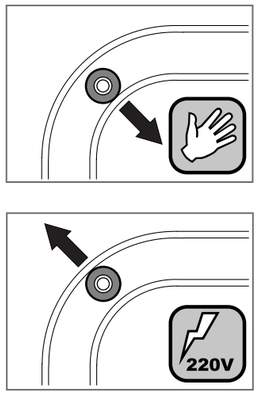
220V

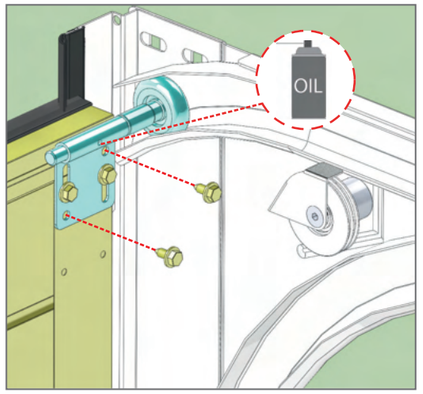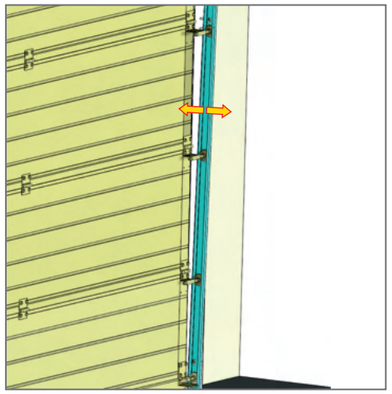
OIL