TLP HL

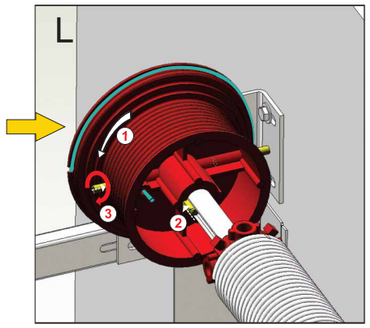
L
1
2
3

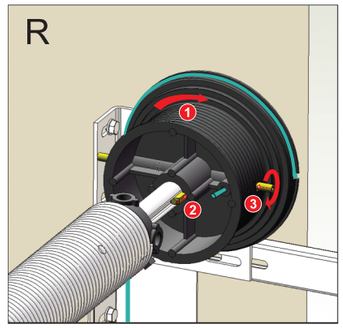
R
1
2
3

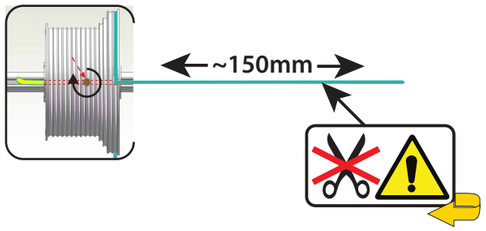
~150mm

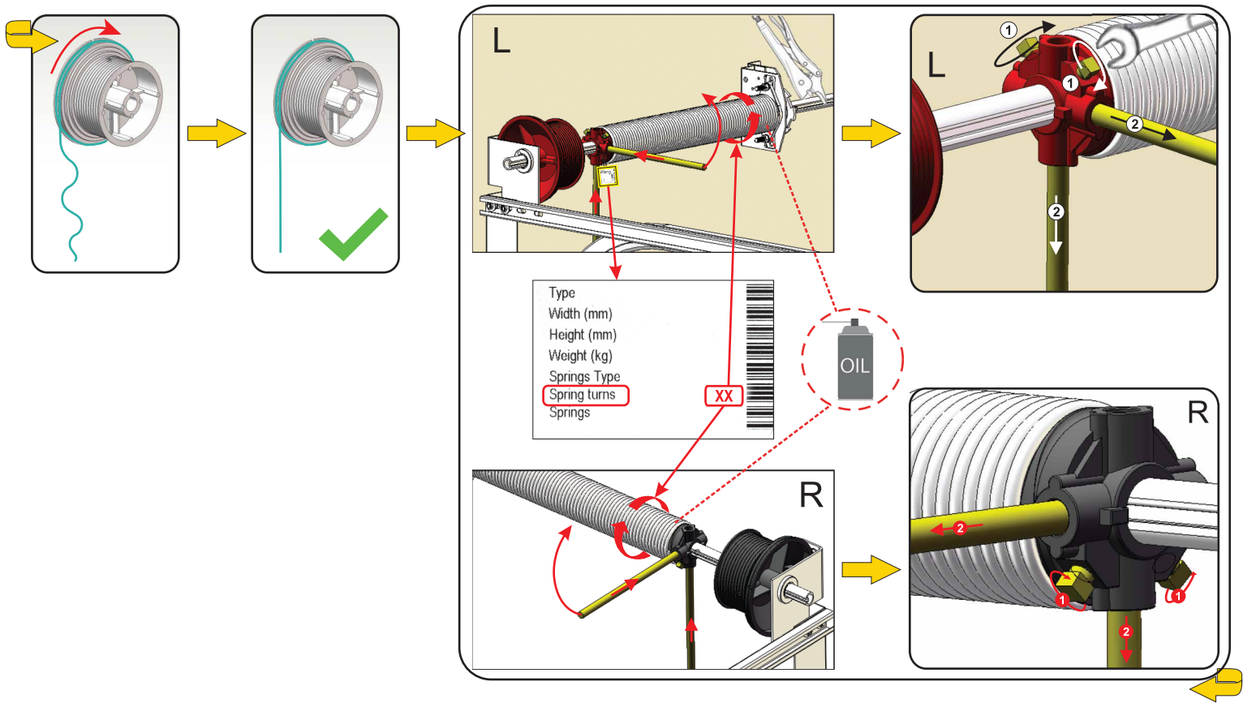
L
Type
Width (mm)
Height (mm)
Weight (kg)
Springs Type
Spring turns
Springs
XX
OIL
R

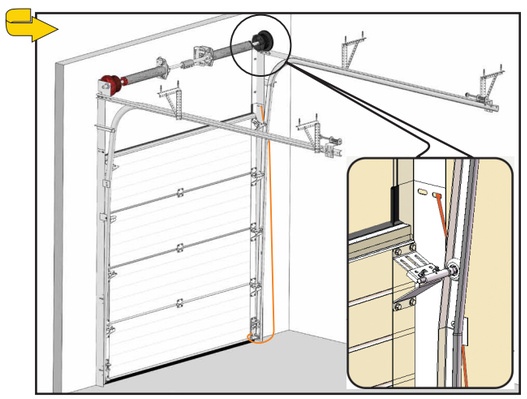

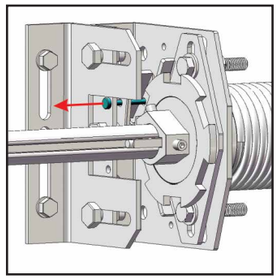

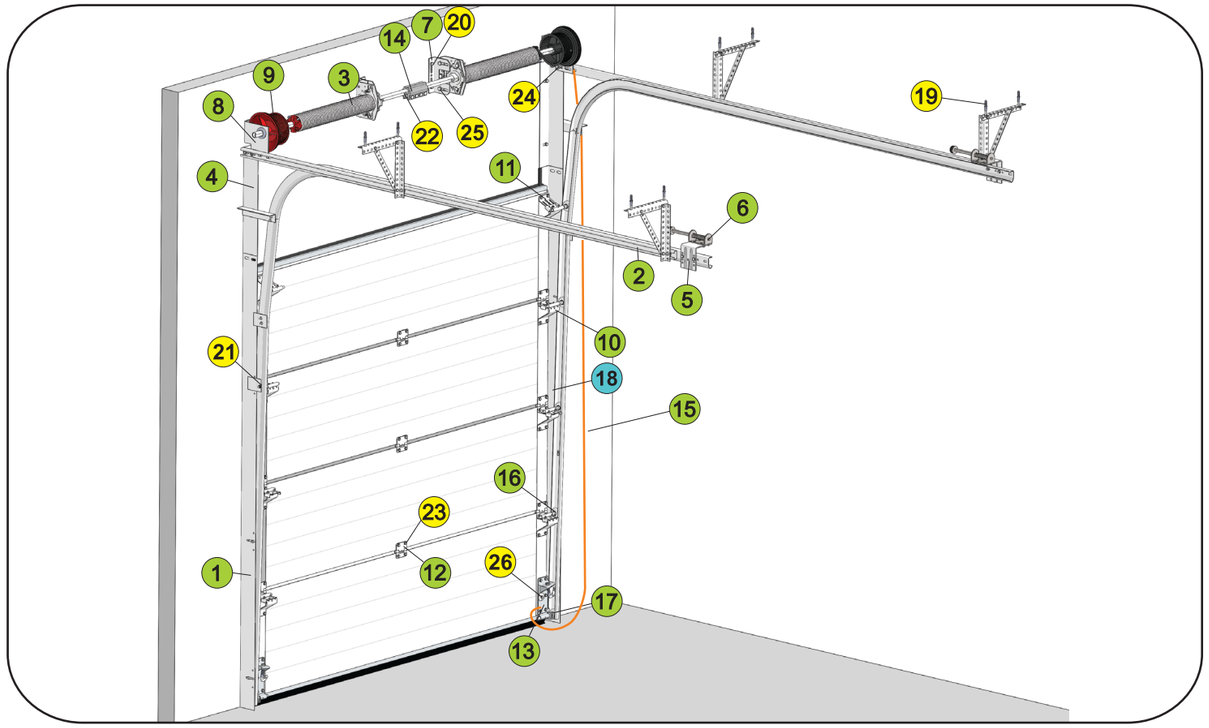
1
2
3
4
5
6
7
8
9
10
11
12
13
14
15
16
17
18
19
20
21
22
23
24
25
26

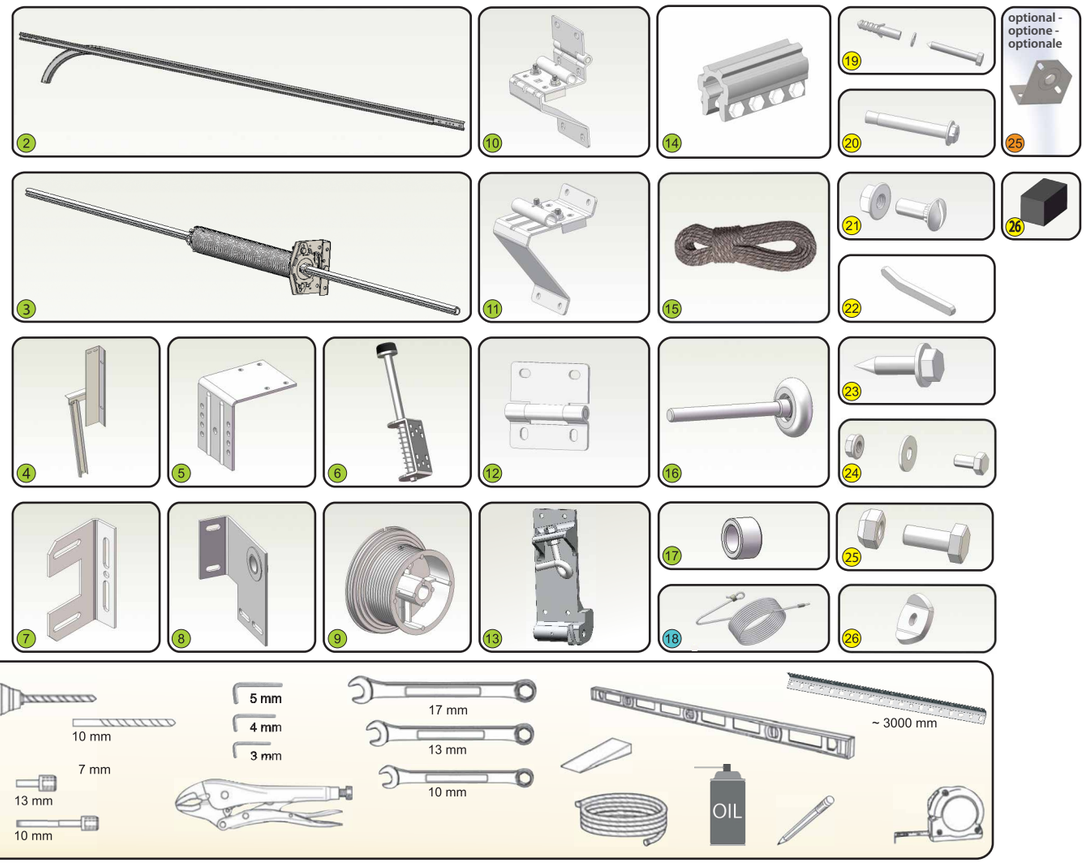
optional - optione - optionale
10 mm
7 mm
13 mm
10 mm
5 mm
4 mm
3 mm
17 mm
13 mm
10 mm
~ 3000 mm
OIL

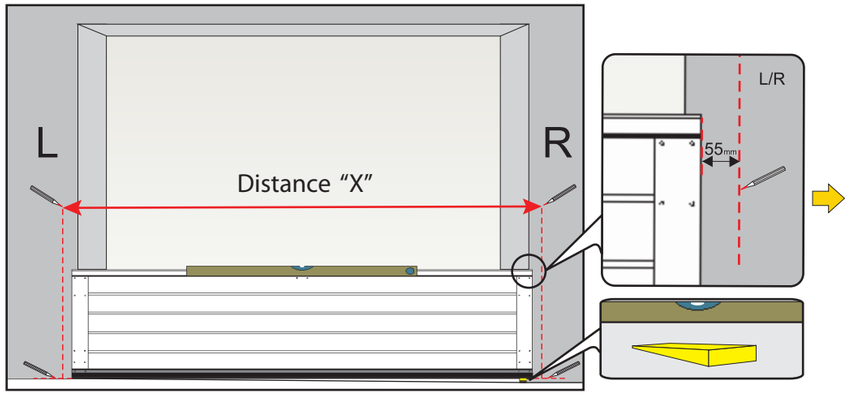

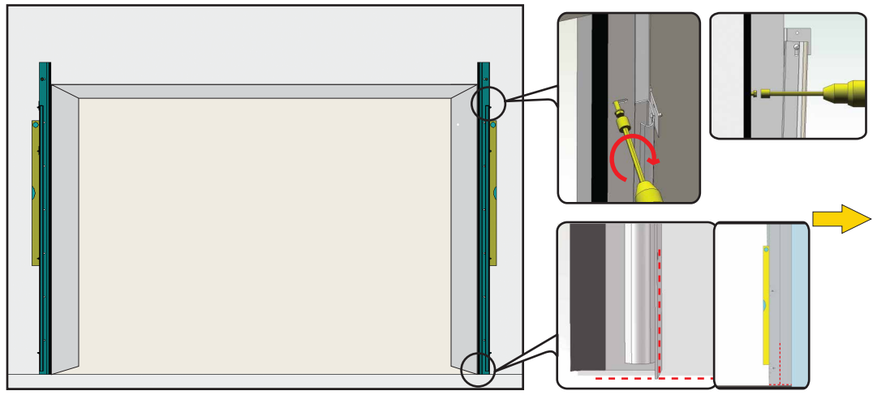

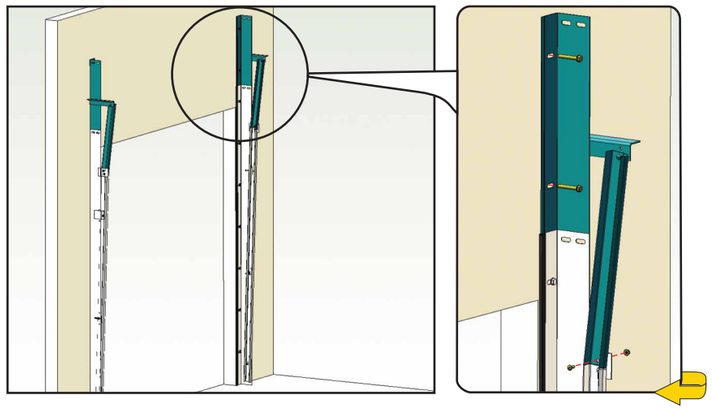

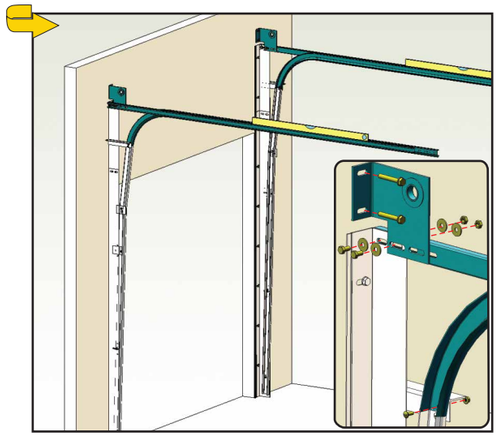

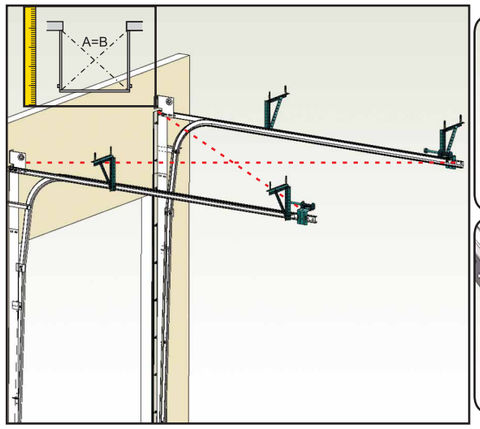

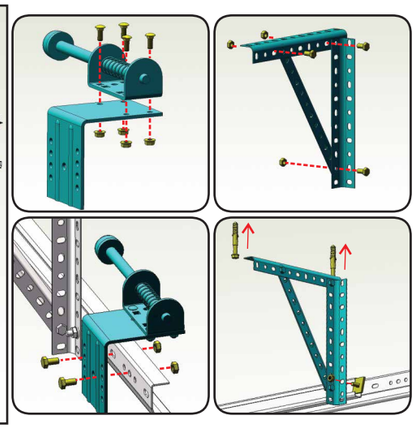

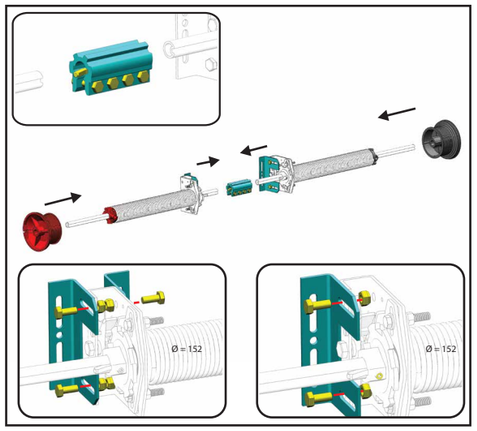

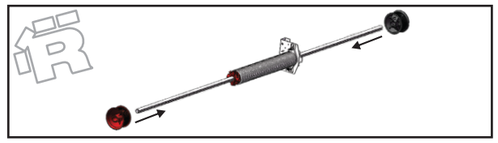

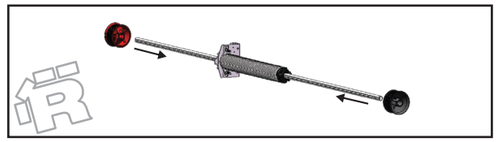

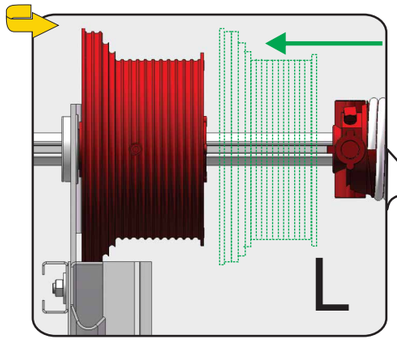

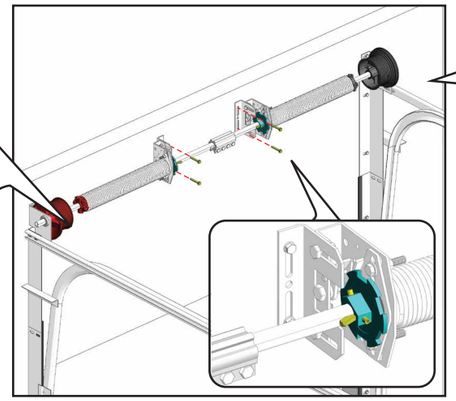

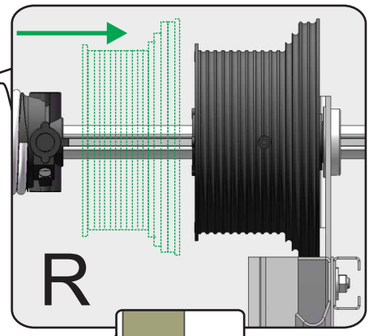

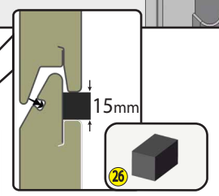

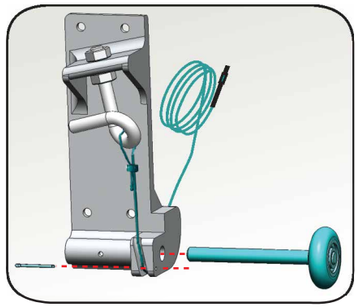

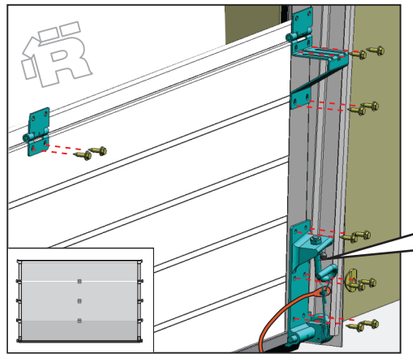

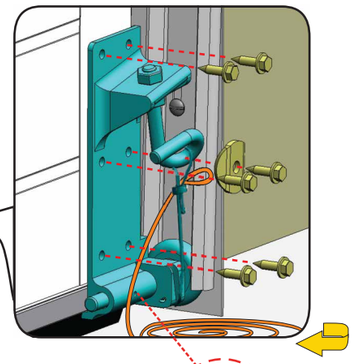

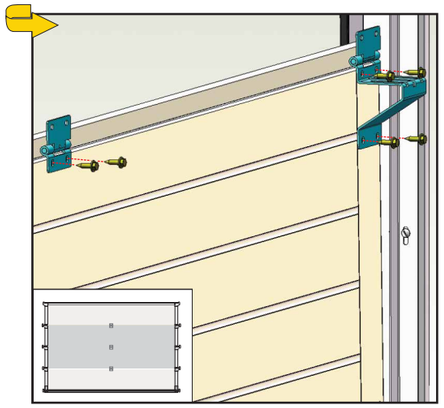

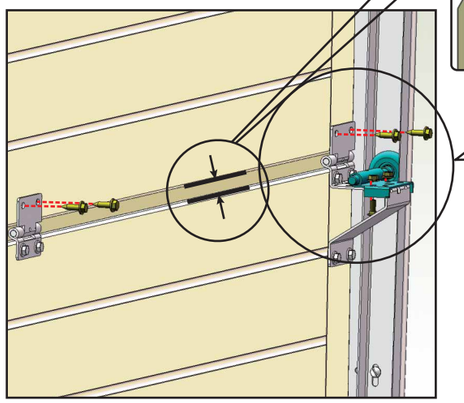

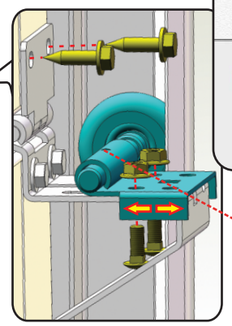

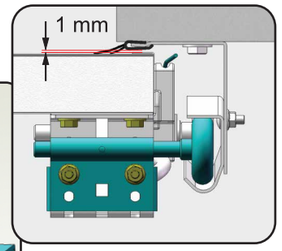

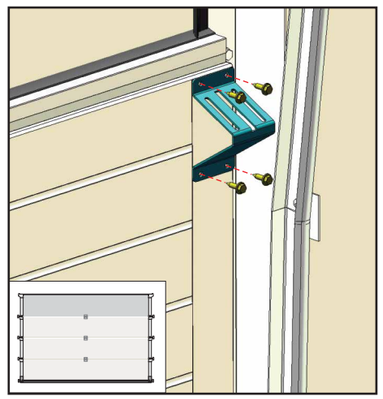

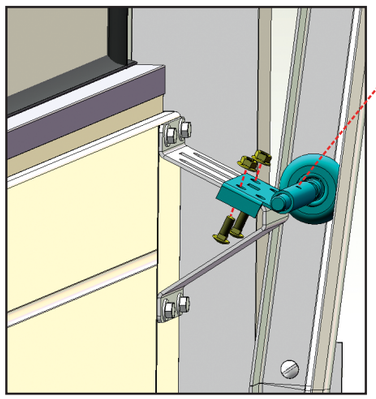

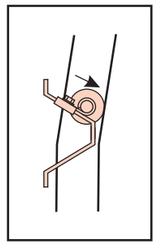

| SECTIONAL DOORS | TORE | VARTAI | PORTE | BRAMY | DEUREN | VARTI | PORTA | SECTIONAL DOORS | TORE | VARTAI | PORTE | BRAMY | DEUREN | VARTI | PORTA |