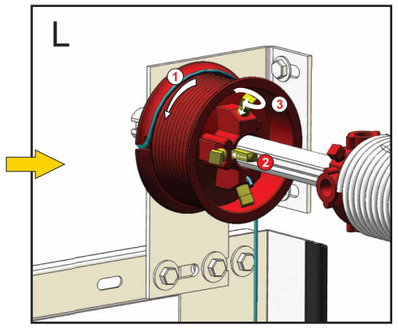
L

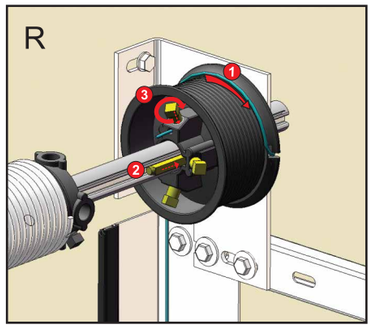
R

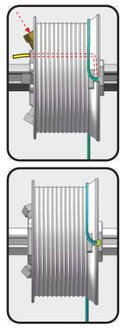

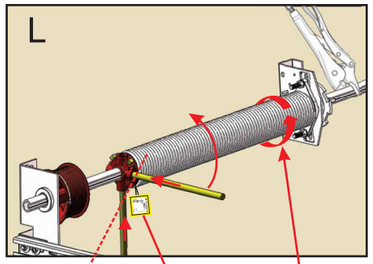
L

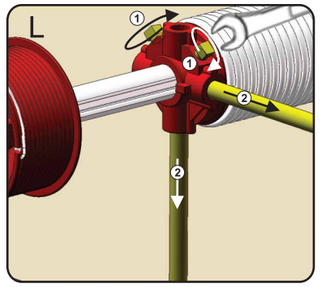
L

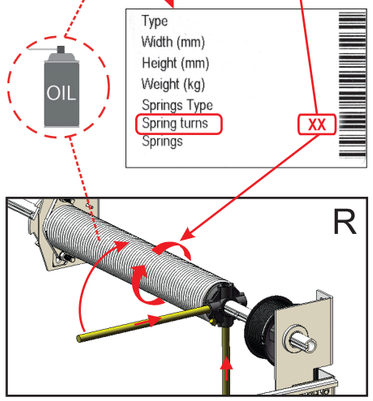
OIL
Type
Width (mm)
Height (mm)
Weight (kg)
Springs Type
Spring turns
Springs
XX
R

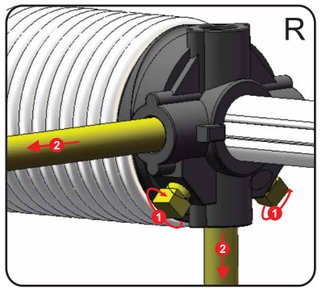
R

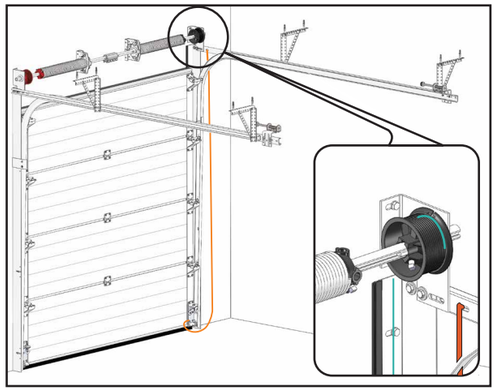

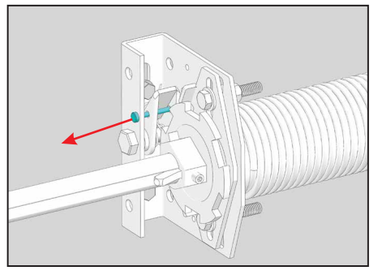

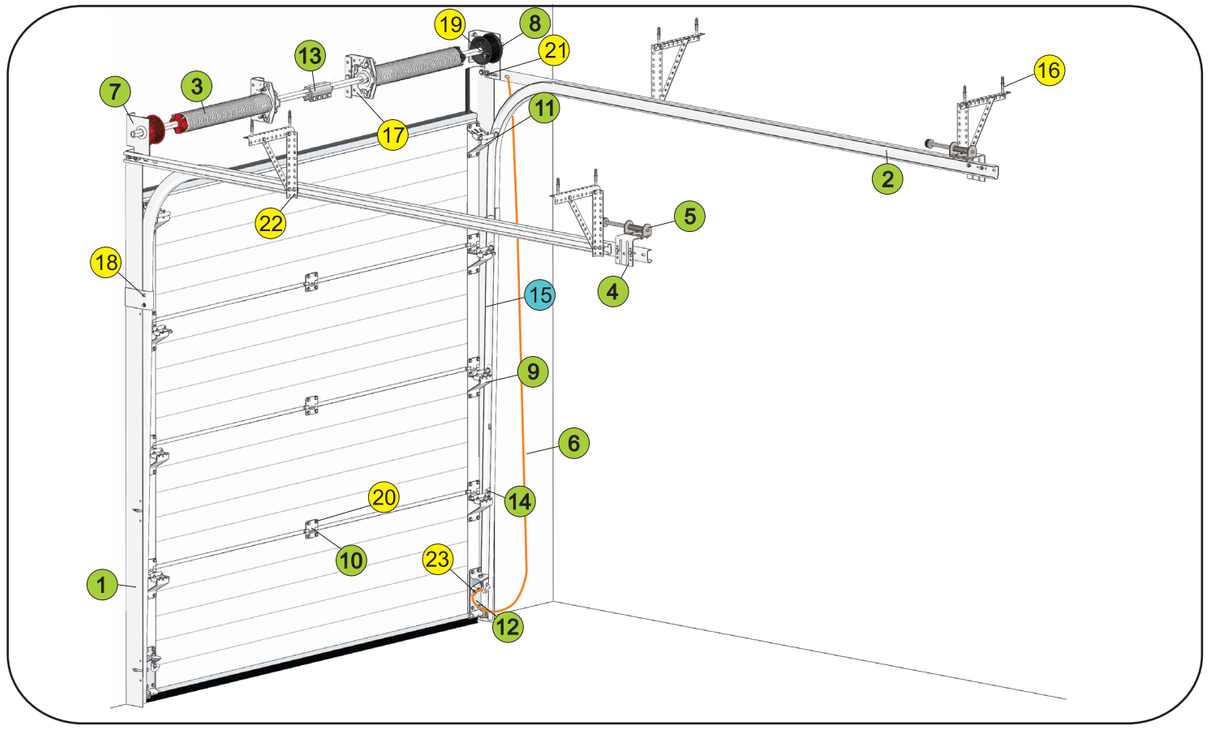
1
2
3
4
5
6
7
8
9
10
11
12
13
14
15
16
17
18
19
20
21
22
23

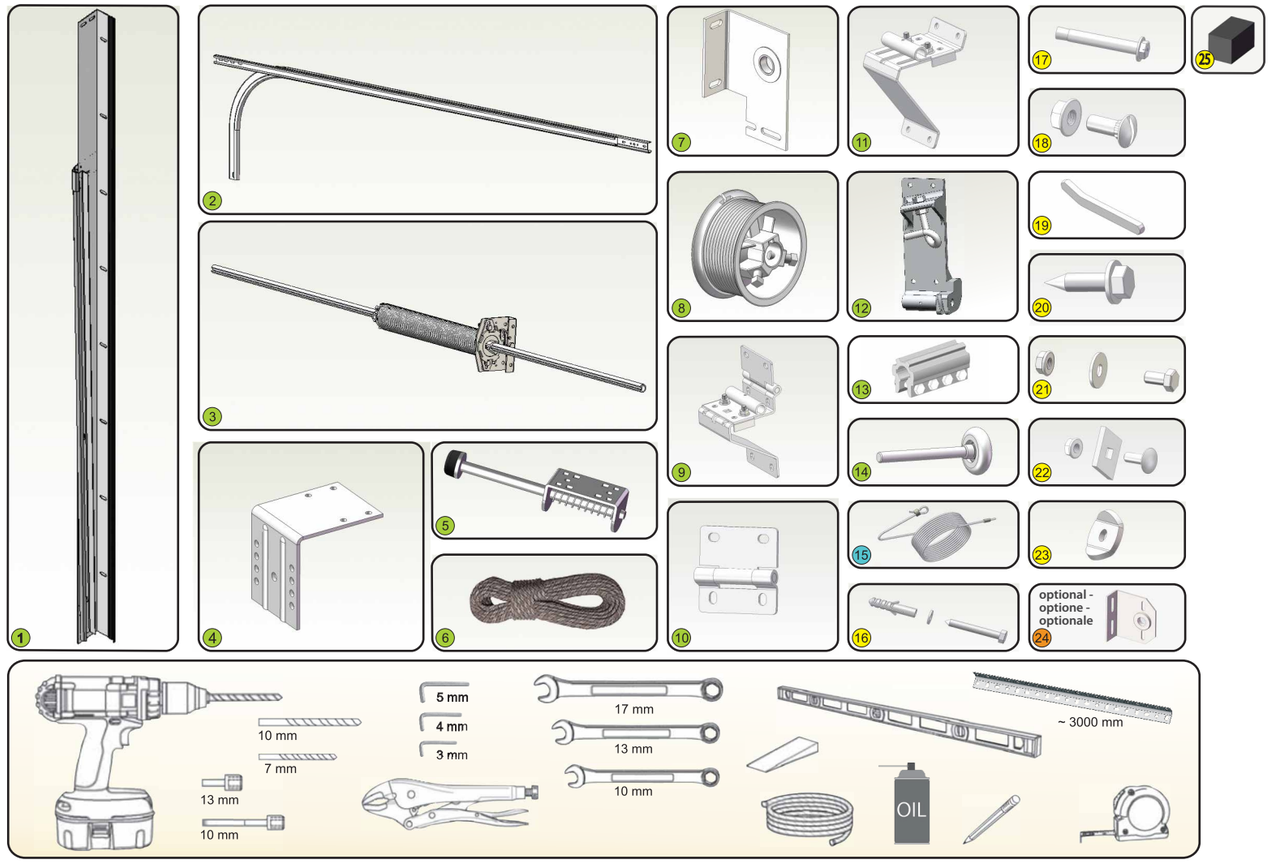
1
2
3
4
5
6
7
8
9
10
11
12
13
14
15
16
17
18
19
20
21
22
23
24
25
optional -
optione -
optionale
5 mm
4 mm
3 mm
10 mm
7 mm
13 mm
10 mm
17 mm
13 mm
10 mm
~ 3000 mm
OIL

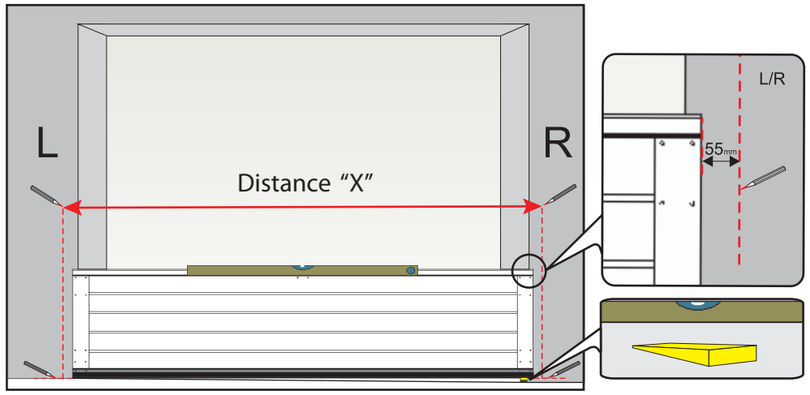
L
R
Distance “X”
L/R
55mm

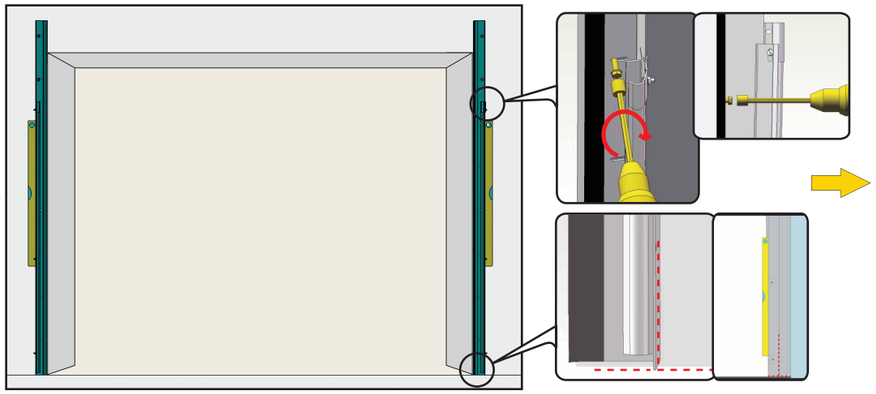

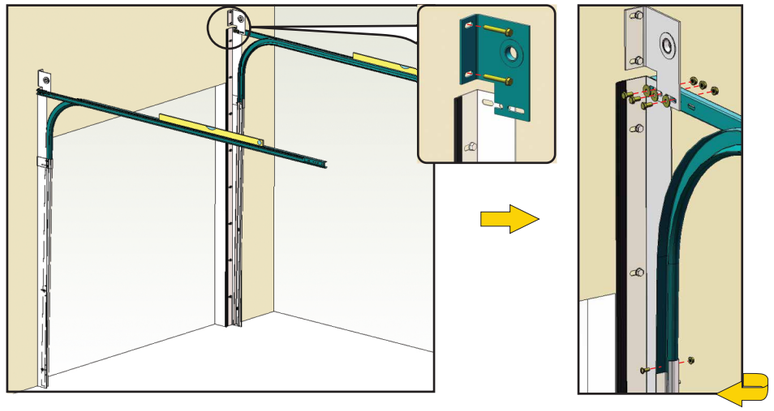

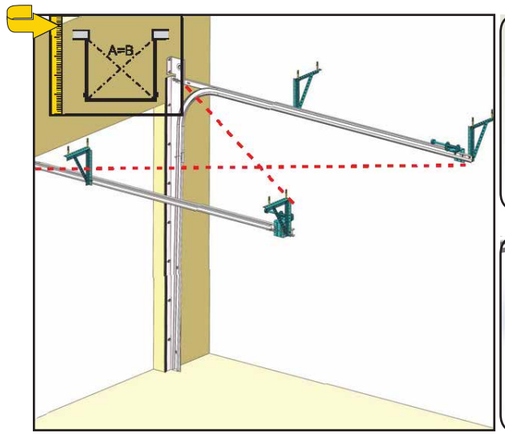
A=B

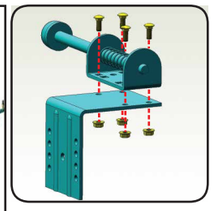

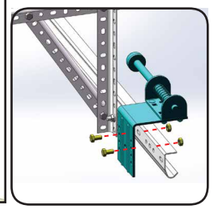

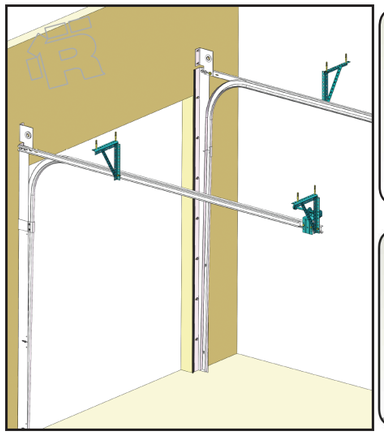

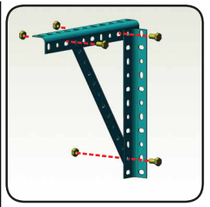

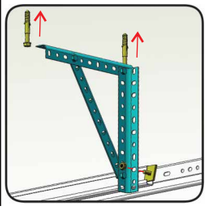

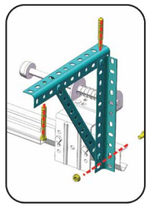

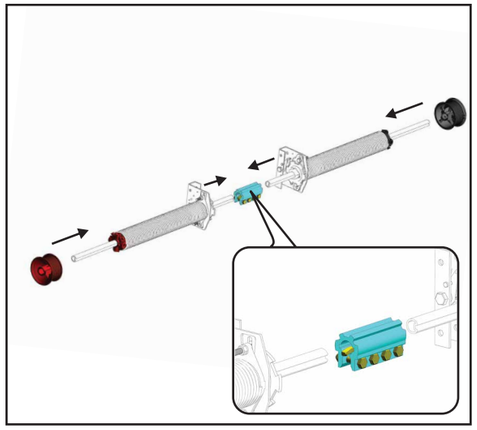

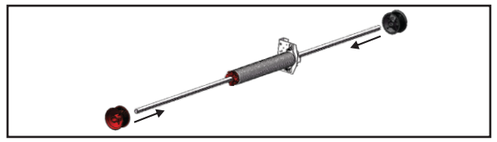

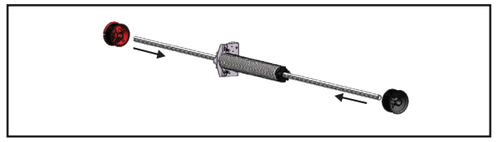

optional - optionen - optionale
24
w > 4500 mm

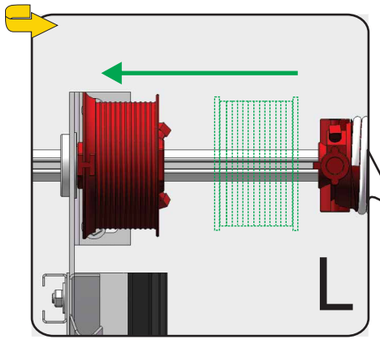
L

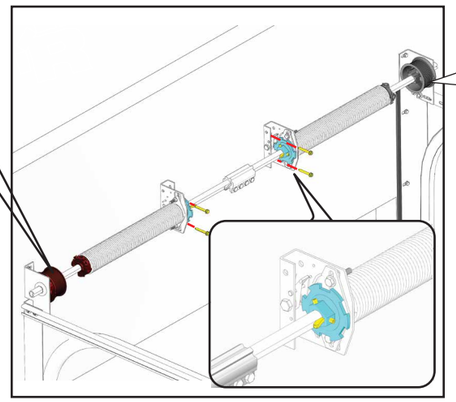

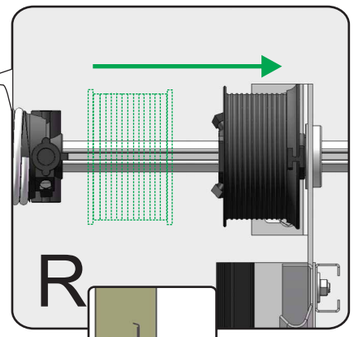
R

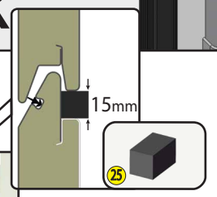
15mm
25

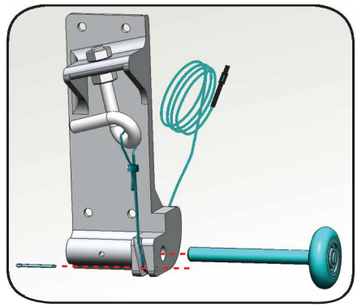

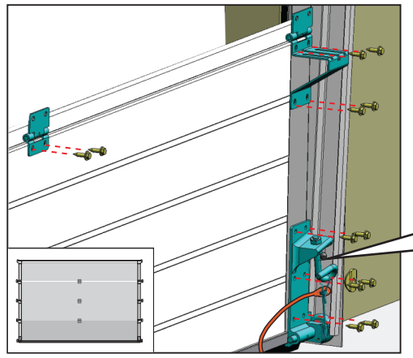

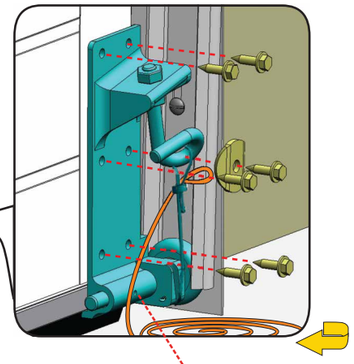
OIL

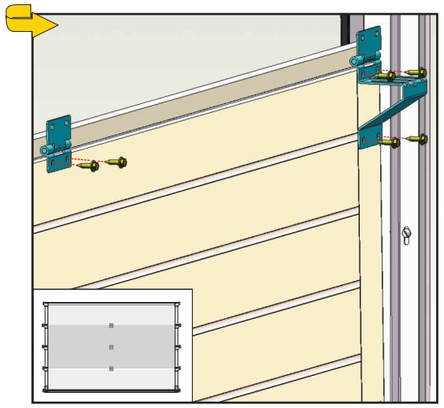

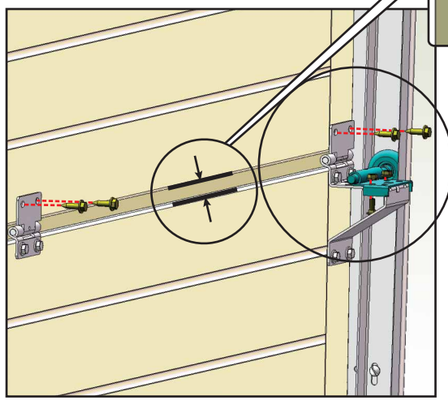

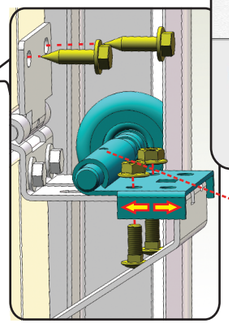
OIL

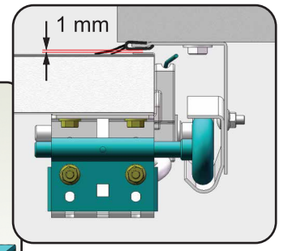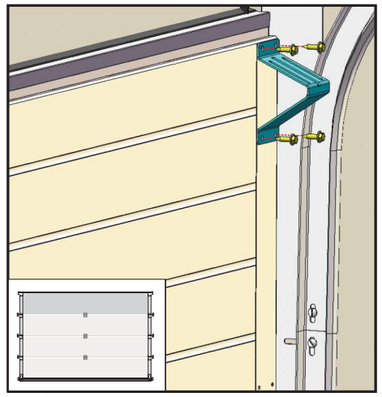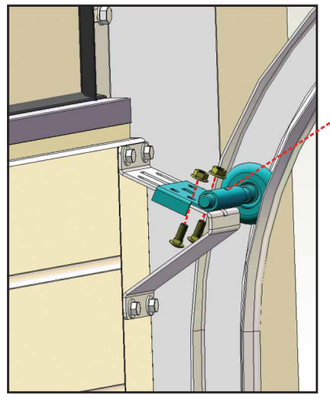
1 mm